SUPPORT TABLETTE INVISIBLE

ITALIANA FERRAMENTA

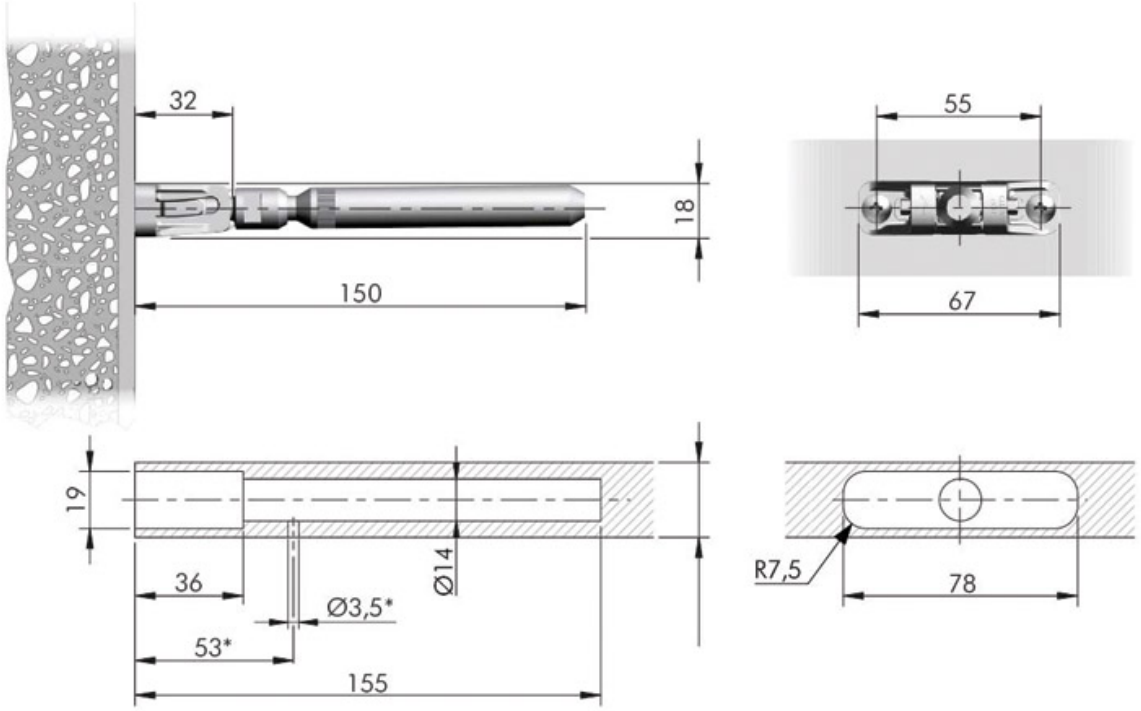

* Optional drilling for security locking with M4 grub screw placed underneath in alignment with the cavity.