SUPPORT REPOSE PIEDS
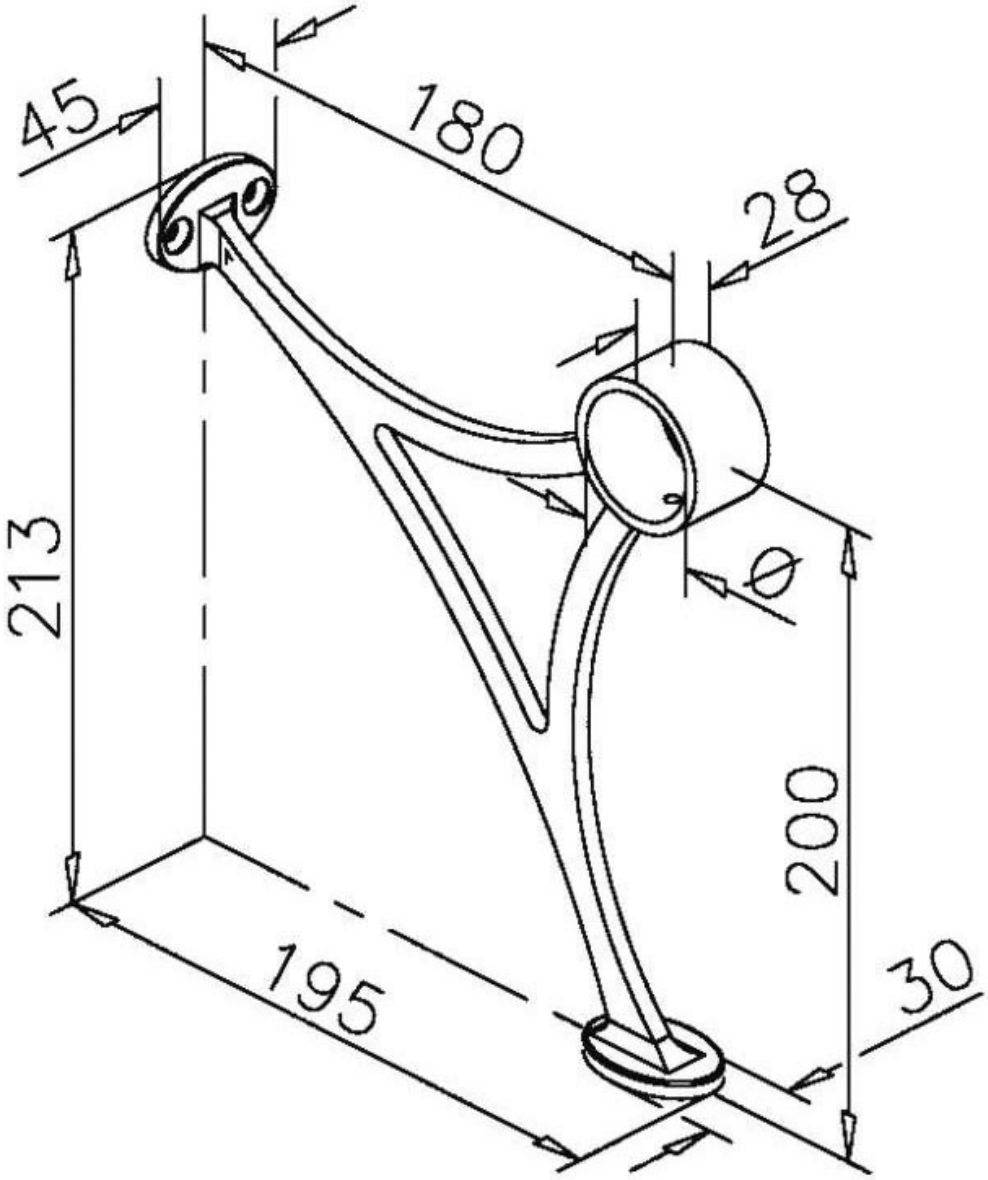
MB2