SUPPORT REPOSE PIEDS HORIZONTAL

MB2

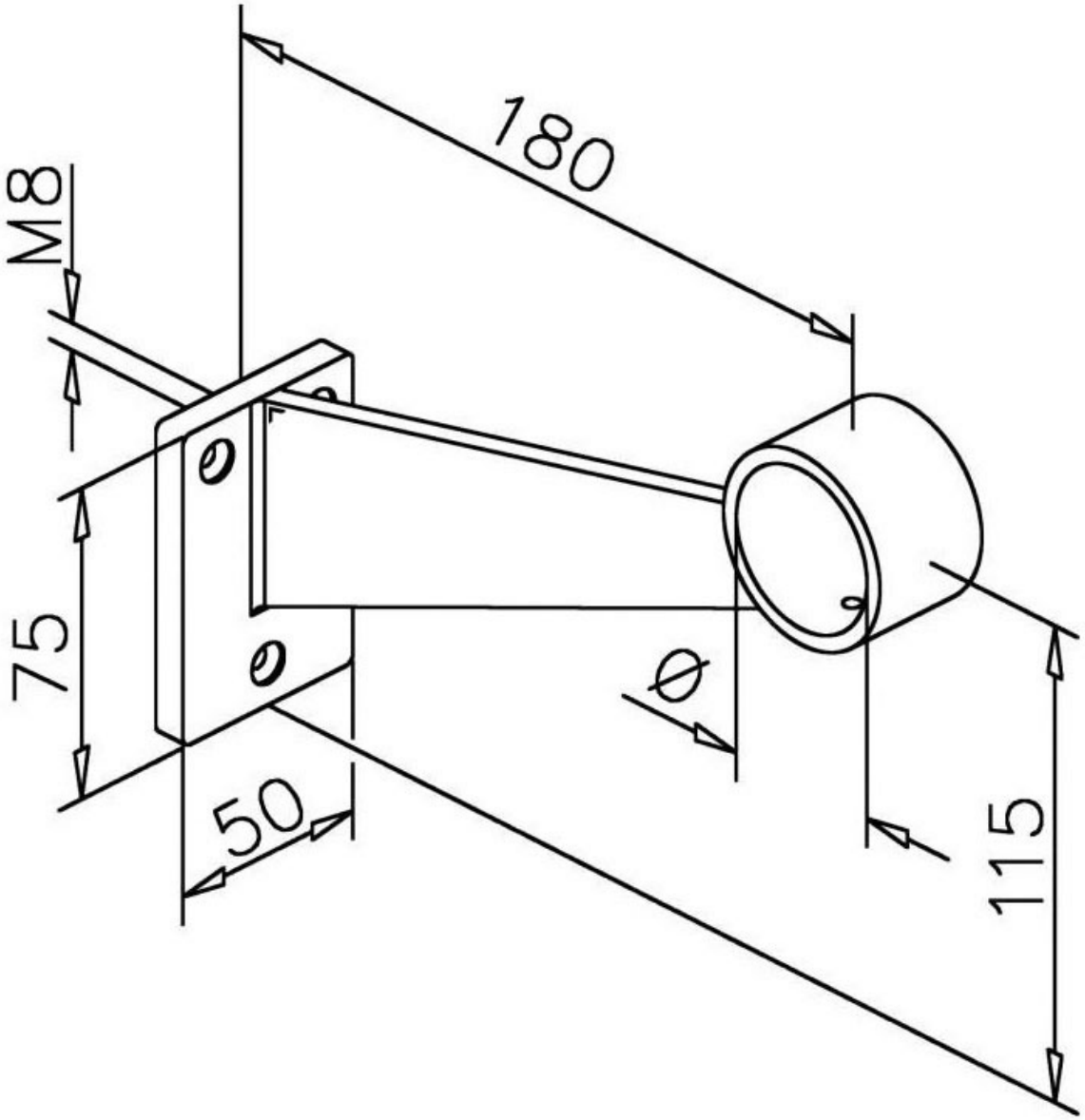

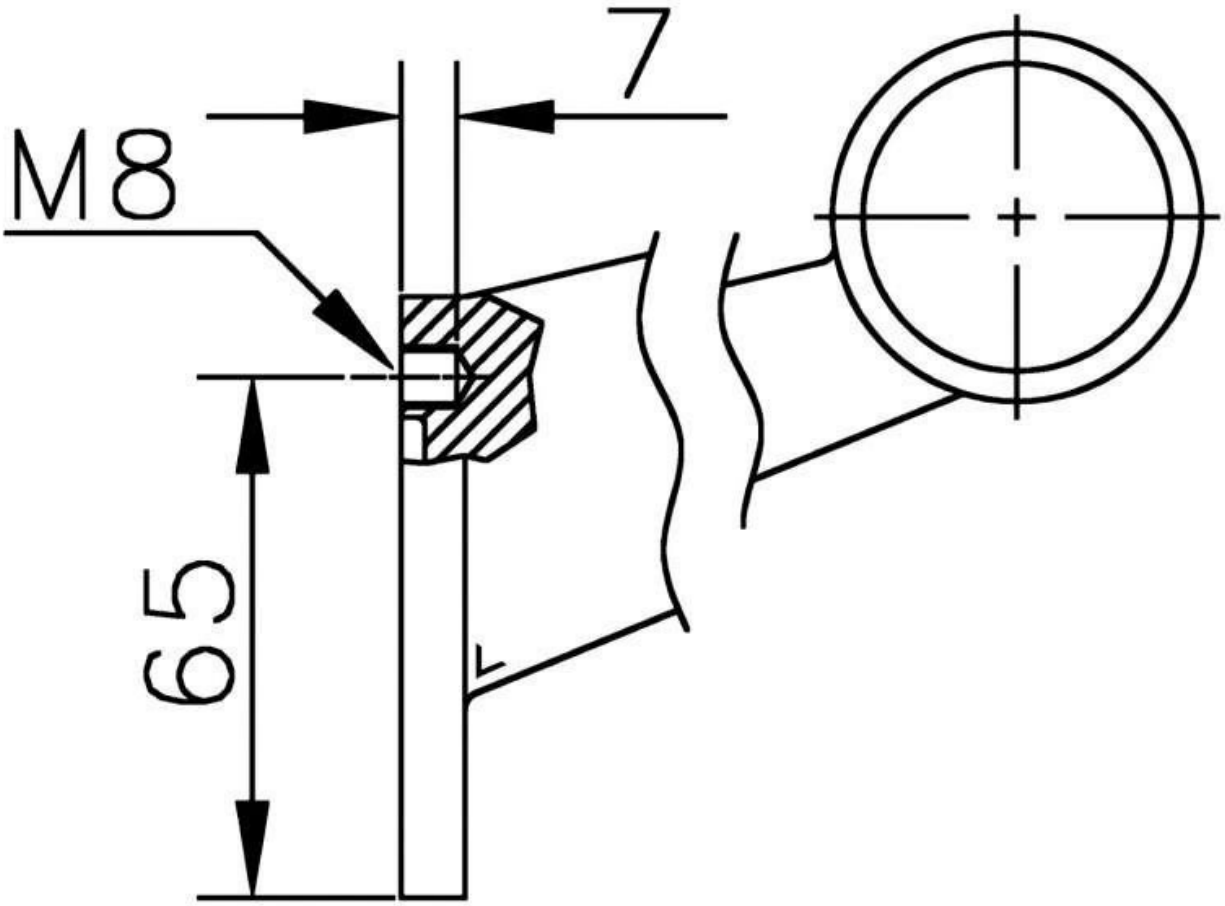
7
M8
65