PLATINE ALUMINIUM
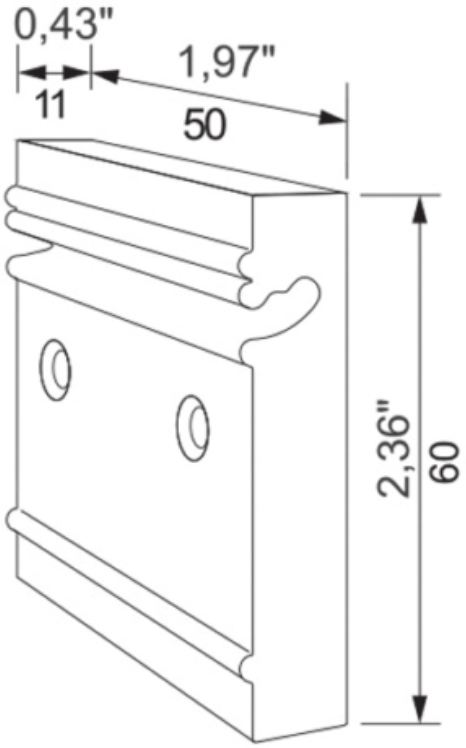
ZOBAL