COULISSE QUADRO 25 STOP CONTROL
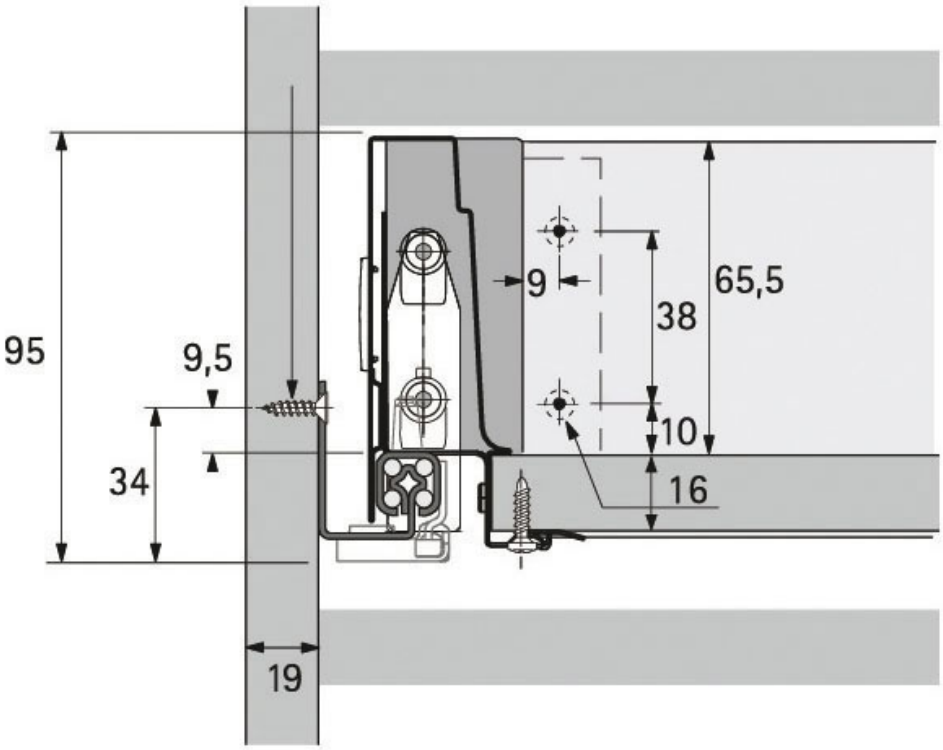
HETTICH