BROCHE BLISTER DOT2
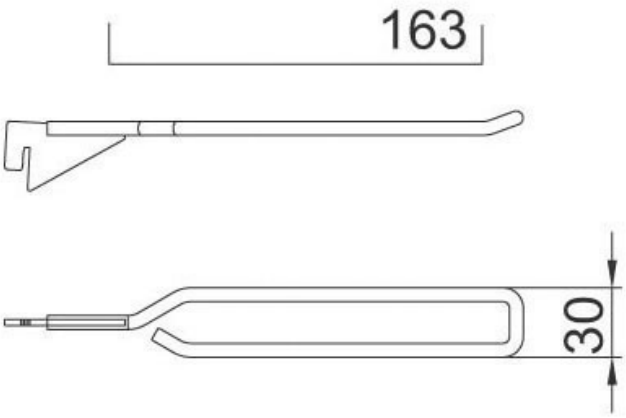
SOFADI